MERCRUISER (320 (EFI) GM 350 V-8 1988-1989)
Serial Nbr Range: 0B157603 THRU 0C622418 ()

FLYWHEEL HOUSING

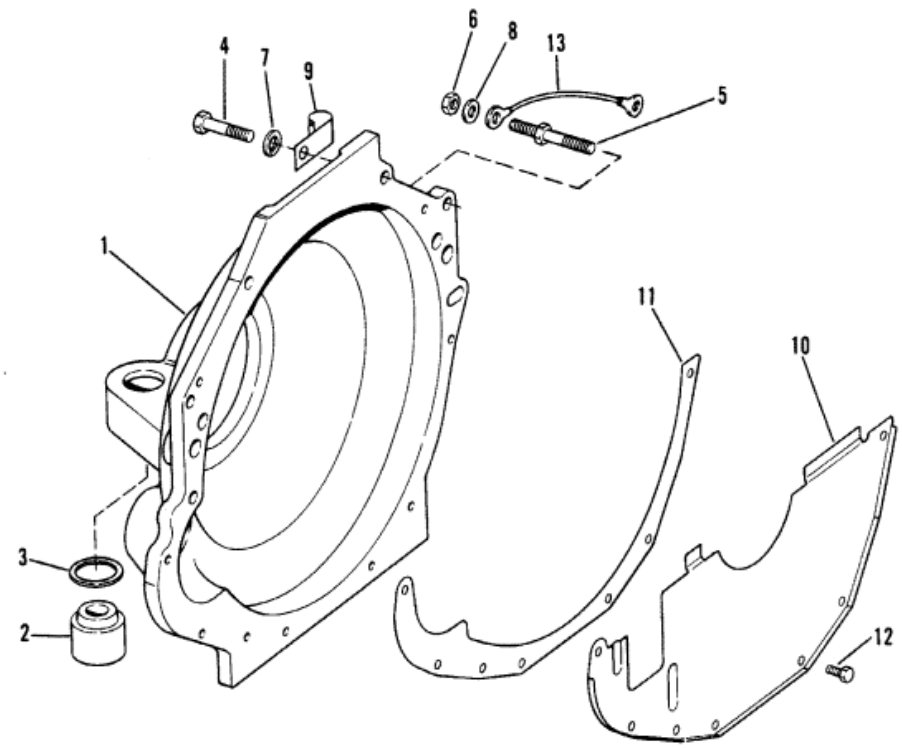

Parts List

Ref	Class	Part	Description	Qty	Comment	Footnote
1		12675A 7	FLYWHEEL HOUSING	1		
2		99297A 1	MOUNT, RUBBER - FLYWHEEL	2		
3	23	99322	SPACER, RUBBER MOUNT - F	2		
4	10	37612	SCREW, FLYWHEEL HOUSING (1	3		
4	10	34354	SCREW, FLYWHEEL HOUSING (1	1		
4	10	32132	SCREW, FLYWHEEL HOUSING (1	1		
5	16	64066	STUD, FLYWHEEL HOUSING (2-1	1		
6	11	32219	NUT, FLYWHEEL HOUSING STUI	1		
7	13	35048	LOCKWASHER, FLYWHEEL HOU	7		
8	12	20572	WASHER, FLYWHEEL HOUSING	1	SPECIAL (3/8")	
10		13930A 3	COVER ASSEMBLY	1		
11	27	96274	GASKET, FLYWHEEL HOUSING	1		1
12	10	32773	SCREW, COVER TO FLYWHEEL I	7		
13	84	62826A 6	WIRE, FLYWHEEL HOUSING STU	1		